HANGER LEG

HEAVY DUTY WELD STUD (BOLT ON) TYPE

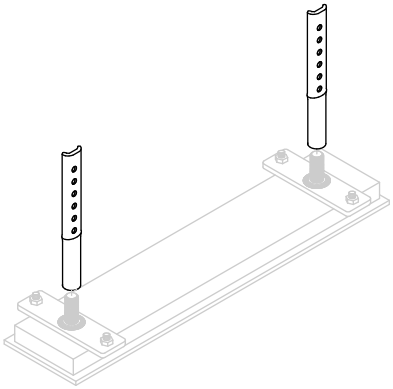

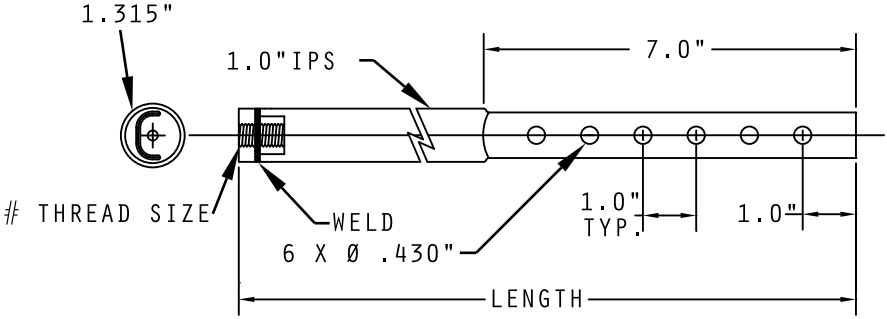

CATALOG NUMBERING SYSTEM (FOR EACH LEG)

SAMPLE CATALOG NUMBER:

EF S # ** B

- B — BOLT ON
- ** — LENGTHS AVAILABLE
- # — THREAD SIZE
- S — S = STEEL

ADDITIONAL LENGTHS AND MATERIALS AVAILABLE

AVAILABLE IN 6" INCREMENTS FROM 12" TO 48"	
STEEL	
PART NUMBER	THREAD SIZE
EFS112B - EFS148B	I.P.S 1.0" PIPE THREAD
EFS212B - EFS248B	5/8" - 11 U.N.C.